K'NEX® Education

TEACHER'S GUIDE™

FORCES, ENERGY AND MOTION™

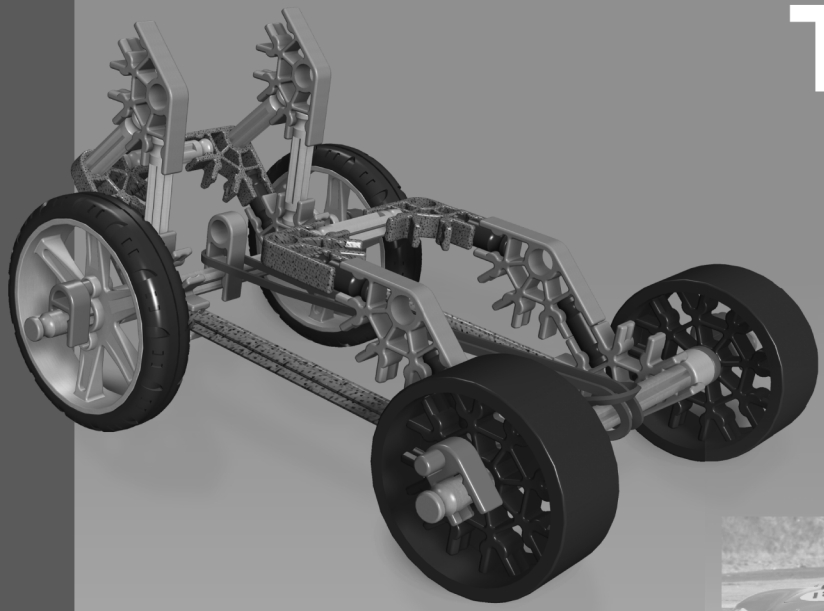

RACER

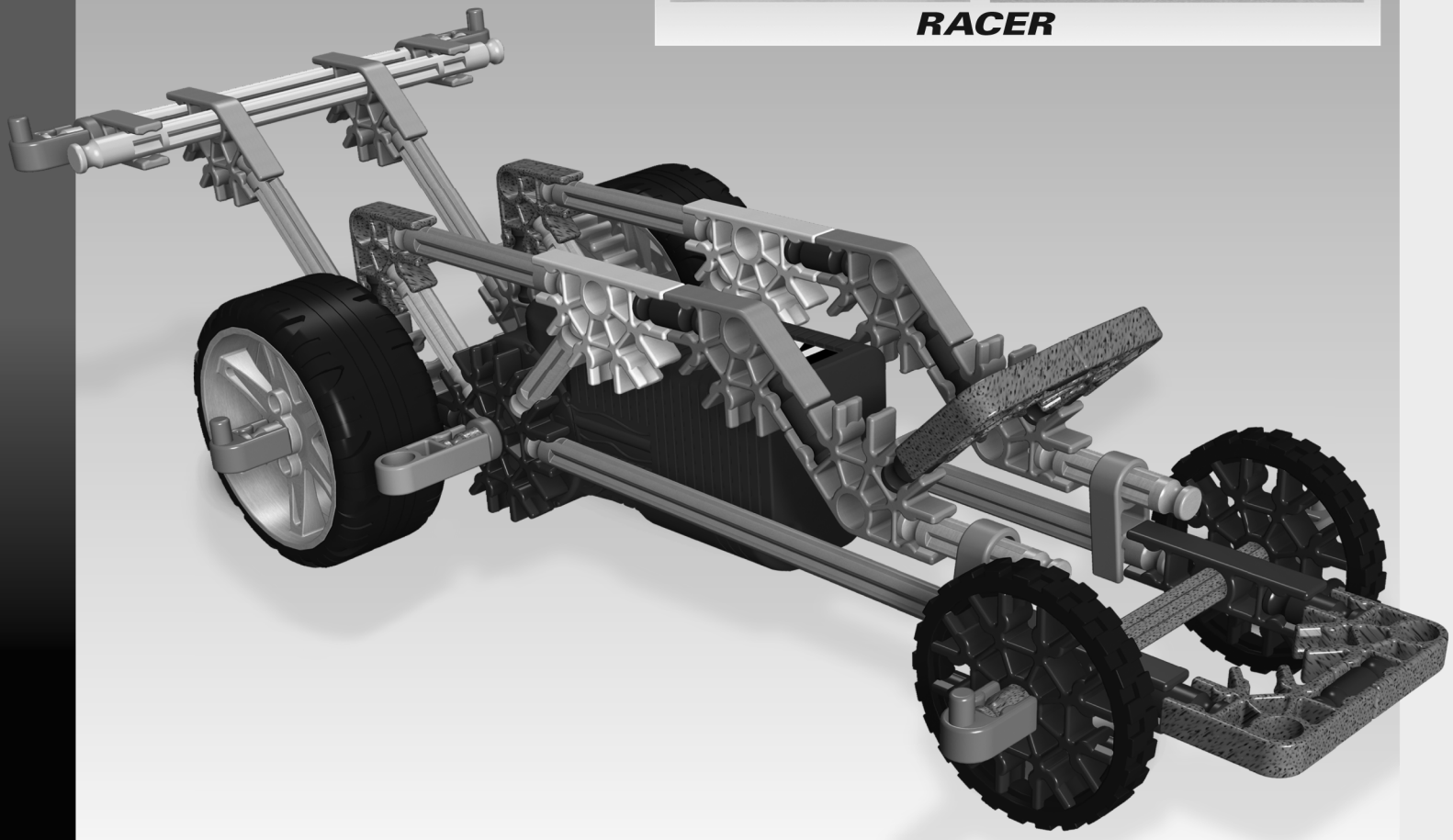

Table of Contents

Racing with the Wind

Objectives
Students will be able to:

- Identify ways to increase the kinetic energy of a wind-powered vehicle.
- Design and implement a "fair test" procedure to test the impact of inferred variables.
- Create and interpret appropriate data displays.
- Apply knowledge to solve a new problem.

Materials
Each group will need:

- K'NEX Education Forces, Energy and Motion materials
- Building Instructions Pages 6-7: Wind Racer (or CD-ROM file)
- File cards (3 x 4, 4 x 6, 5 x 8)
- Hole punch for preparing the file cards
- Masking tape
- Box fan/fans
- Adding machine tape
- Graph paper
- Metric tape
- Stop watch or clock with second hand
- Copies of:
  Student Response Sheet 13
  'The Wind Bag Express' Design Brief

You will need:

- Completed model of the Wind Racer
- A box fan

Time to Build:
Less than 15 minutes

Length of Lesson:
45 - 50 minutes

Design Brief:
1 x 45 minutes

Process

Engage

1. Set up the Wind Racer model in front of a box fan. Ask the students to:
   - Observe the wind powered racer being pushed by a current of air from the fan.
   - Make suggestions regarding the potential and kinetic energy of the vehicle and how that energy is transferred. Field the student responses and record their ideas.
   - Discuss, in their teams, two ways to increase the kinetic energy of the wind-powered racer and consider **how they could tell that the kinetic energy was increased.** *(Measure the speed.)*
   - Report their ideas back to the class. Record the students' thoughts, and query them as to their rationale.

2. Distribute copies of **Student Response Sheet 13** once all teams have reported back.

Explore

3. Teams will select one of the Wind Powered Challenge Cards, then design and carry out a "fair test" procedure for answering their chosen question.

EXPLAIN

4. Students are individually responsible for communicating the results of their investigation through the construction of a graph and a written interpretation.

ELABORATE

5. If there are questions yet unanswered allot additional time to resolve these queries.

6. Once all questions have been answered it is time to share and compile the data obtained from each of the team investigations. You may want to use a large data chart, such as the one shown below, for this.

Increasing the Kinetic Energy of the Wind Powered Racer

VARIABLE INVESTIGATED	RESULTS
Size of card	
Type of sail material	
Etc.	

EVALUATE

7. The evaluation phase of this lesson focuses on a design brief.
   - In an attempt to produce the most efficient model, **'The Wind Bag Express' Design Brief** challenges students to employ two, or more, of the variables that have been proven to increase the kinetic energy of the wind-powdered racer.
   - Remind students of the design loop as this is an open-ended challenge and lends itself to multiple modifications of the designed model.

EXTEND

8. The wind powered racer lesson could be extended by asking the students to:
   - Create a wind-powered racer that is able to move in the slightest breeze.
   - Investigate the efficiency of hard plastic sails*.
   - Modify the wind-powered racer to work in a cross wind.

Teacher's Notes

* *These sails can be crafted easily from two-liter beverage containers:*

- *Cut off the top and bottom of the bottle leaving a plastic cylinder. The cylinder can then be cut in half lengthwise creating two curved sails.*
- *Have the students experiment with other shapes and sizes of these bottle sails.*
- *Keep safety in mind and provide safety glasses for students. It is strongly recommended that the teacher use a knife to create a slit in the top and bottom sections of the bottle as a "starter" so that the students do not have to force their scissors through the plastic.*

Name:_____

Date:_____

As a Team

1. Select one of the following challenge cards.

2. Design a "fair test" investigation to answer the selected question.

Note: Your team also has the option of creating a question.

Wind-Powered Challenge Cards

Does the size of the sail - 3x5, 4x6, and 5x8 - increase or decrease the kinetic energy of the wind racer?	Does the shape of the sail make a difference in the kinetic energy of the wind racer? *Note: To be a fair test, the area of each shape must be the same.*
Does the speed of the fan make a difference in the kinetic energy of the wind racer?	Does the orientation of the sail, vertical or horizontal, make a difference in the wind racer's kinetic energy?
Does its placement in front of the fan make a difference in the racer's kinetic energy?	Will the speed of the fan change the kinetic energy of the wind racer?
Will the type of sail material, such as cloth, paper, or plastic, make a difference in the kinetic energy of the wind racer?	Will a curved or folded sail increase the kinetic energy of the wind racer?

Name:_____

Date:_____

EXPLORE

3. Write out your "fair test" plan of action using the outline below. Be sure to use complete sentences in your answers so that this outline can be used as your lab report.

   a. Which question will your team investigate?

   b. What materials will you need to answer this question?

   c. Which variables do you think should be held constant?

   d. Which variable will you make your independent variable? Which will be your dependent variable?

   e. What kind of information (data) will you collect? How will you know that the kinetic energy of the racer has changed?

   f. How many trials will your team conduct?

   g. How will you display this data? Show your display here.

Name:_____

Date:_____

EXPLAIN

On Your Own

4. Use your team's data to construct a graph. (Your teacher will provide the graph paper for this activity.)

5. Describe the results of your investigation:

ELABORATE

6. What other changes can you suggest that might increase the kinetic energy of your wind-powered racer?

'The Wind Bag Express' Design Brief

The Context:
Each time oil prices increase, inexpensive and alternative sources of energy attract more attention.

The Scenario:
The popularity of hybrid cars and alternative fuels is helping our country become less dependent on oil as an energy source. Wind energy is also growing in popularity as a way to generate electricity. Could the power of the wind be harnessed to help power our cars as well?

The Challenge:
There are places in our country where the wind blows much of the time and your research company, 'Geeks Galore,' has decided that a car with wind-powered capabilities would be a viable project to investigate. Prior tests with wind-powered models have confirmed that certain variables can increase the kinetic energy of such a car. Your challenge is to apply this previous research to create the fastest wind powered vehicle possible.

The Limitations:

- Each team will have a total of three lesson periods for this project:
  - 1 lesson to design and create an action plan.
  - 2 lessons to construct, test, and refine the wind racer design.
- Teams may use any materials to construct their vehicle.
- Vehicles must stay inside the track (two strips of adding machine tape 60 cm apart).
- Final time trials, consisting of a single run, will be conducted at the end of the third lesson period.
- All teams will be responsible for computing and averaging the speed of all the racers.

The Rules:

- Every team member must keep a 'Wind Bag Express' Journal. All design changes, sketches, test results, data, conclusions, and ideas for further modifications should be recorded.
- There are no weight requirements for the vehicle.
- Teams will be responsible for supplying additional materials.
- Should the vehicle stray off the track, a 1-second penalty will be added to the total vehicle travel time.

NSES Content Standards Alignments

National Science Education Standards *Students will develop an understanding of:*
UNIFYING CONCEPTS AND PROCESSES
• *Systems, order, and organization*
• *Evidence, models, and explanation*
• *Change, constancy, and measurement*
• *Form and function*
SCIENCE AS INQUIRY
• *Abilities necessary to do scientific inquiry*
• *Understanding about scientific inquiry*
PHYSICAL SCIENCE
• *Motions and Forces*
• *Transfer of Energy*
SCIENCE AND TECHNOLOGY
• *Abilities of technological design*
• *Understanding about science and technology*
SCIENCE IN PERSONAL AND SOCIAL PERSPECTIVES
• *Science and technology in society*

Standards for Technological Literacy: Content for the Study of Technology

Standards for Technological Literacy: Content for the Study of Technology (Grades 5-8) *Students will develop an understanding of:*
THE NATURE OF TECHNOLOGY
Core Concepts of Technology
• *Systems*
• *Processes*
• *Requirements*
• *Trade-offs*
DESIGN
The Attributes of Design
• *Design leads to useful products and systems*
• *There is no perfect design*
Engineering Design
• *Brainstorming*
• *Modeling, testing, evaluating, and modifying*
The Role of Troubleshooting, Research and Development, Invention and Innovation, and Experimentation in Problem Solving.
• *Troubleshooting*
• *Invention and innovation*
• *Experimentation*
ABILITIES OF A TECHNOLOGICAL WORLD
Apply Design Process
• *Apply design process*
• *Identify criteria and constraints*
• *Model a solution to a problem*
• *Test and evaluate*
• *Make a product or system*

Used with permission of the ITEEA (www.iteea.org)

NCTM Standards Alignments

National Council of Teachers of Mathematics Education Standards and Expectations for Grades 5 - 8
NUMBER AND OPERATIONS
Instructional programs from pre-kindergarten through grade 12 should enable all students to:
• *Understand numbers, ways of representing numbers, relationships among numbers, and number systems.*
• *Understand meanings of operations and how they relate to one another.*
• *Compute fluently and make reasonable estimates.*
Grades 3 - 5 Expectations: In grades 3 - 5 all students should: Understand numbers, ways of representing numbers, relationships among numbers, and number systems.
• *Understand the place-value structure of the base-ten number system and be able to represent and compare whole numbers and decimals.*
• *Develop understanding of fractions as parts of unit wholes, as parts of a collection, as locations on number lines, and as divisions of whole numbers.*
• *Use models, benchmarks, and equivalent forms to judge the size of fractions.*
• *Recognize and generate equivalent forms of commonly used fractions, decimals, and percents.*
Grades 3 - 5 Expectations: In grades 3 - 5 all students should: Understand meanings of operations and how they relate to one another.
• *Understand various meanings of multiplication and division.*
• *Understand the effects of multiplying and dividing whole numbers.*
• *Identify and use relationships between operations, such as division as the inverse of multiplication, to solve problems.*
Grades 3 - 5 Expectations: In grades 3 - 5 all students should: Compute fluently and make reasonable estimates
• *Develop fluency with basic number combinations for multiplication and division and use these combinations to mentally compute related problems, such as 30 × 50.*
• *Develop fluency in adding, subtracting, multiplying, and dividing whole numbers.*
• *Develop and use strategies to estimate computations involving fractions and decimals in situations relevant to students' experience.*
• *Select appropriate methods and tools for computing with whole numbers from among mental computation, estimation, calculators, and paper and pencil according to the context and nature of the computation and use the selected method or tools.*
ALGEBRA
Instructional programs from pre-kindergarten through grade 12 should enable all students to:
• *Understand patterns, relations, and functions.*
• *Represent and analyze mathematical situations and structures using algebraic symbols.*
• *Use mathematical models to represent and understand quantitative relationships.*
• *Analyze change in various contexts.*
Grades 3 - 5 Expectations: In grades 3 - 5 all students should: Understand patterns, relations, and functions.
• *Represent and analyze patterns and functions, using words, tables, and graphs.*

Grades 3 - 5 Expectations: In grades 3 - 5 all students should: Represent and analyze mathematical situations and structures using algebraic symbols.
• *Represent the idea of a variable as an unknown quantity using a letter or a symbol.*
• *Express mathematical relationships using equations.*
Grades 3 - 5 Expectations: In grades 3 - 5 all students should: Use mathematical models to represent and understand quantitative relationships.
• *Model problem situations with objects and use representations such as graphs, tables, and equations to draw conclusions.*
Grades 3 - 5 Expectations: In grades 3 - 5 all students should: Analyze change in various contexts.
• *Investigate how a change in one variable relates to a change in a second variable.*
• *Identify and describe situations with constant or varying rates of change and compare them.*
MEASUREMENT STANDARD
Instructional programs from pre-kindergarten through grade 12 should enable all students to:
• *Understand measurable attributes of objects and the units, systems, and processes of measurement.*
• *Apply appropriate techniques , tools, and formulas to determine measurements.*
Grades 3 - 5 Expectations: In grades 3 - 5 all students should: Understand measurable attributes of objects and the units, systems, and processes of measurement.
• *Understand such attributes as length, and select the appropriate type of unit for measuring each attribute.*
• *Understand the need for measuring with standard units and become familiar with standard units in the customary and metric systems.*
• *Carry out simple unit conversions, such as from centimeters to meters, within a system of measurement.*
• *Understand that measurements are approximations and how differences in units affect precision.*
DATA ANALYSIS AND PROBABILITY
Instructional programs from pre-kindergarten through grade 12 should enable all students to:
• *Formulate questions that can be addressed with data and collect, organize, and display relevant data to answer them.*
• *Select and use appropriate statistical methods to analyze data.*
• *Develop and evaluate inferences and predictions that are based on data.*
• *Understand and apply basic concepts of probability.*
Grades 3 - 5 Expectations: In grades 3 - 5 all students should: Formulate questions that can be addressed with data and collect, organize, and display relevant data to answer them.
• *Collect data using observations, surveys, and experiments.*
• *Represent data using tables and graphs such as line plots, bar graphs, and line graphs.*
Grades 3 - 5 Expectations: In grades 3 - 5 all students should: Select and use appropriate statistical methods to analyze data.
• *Describe the shape and important features of a set of data and compare related data sets, with an emphasis on how the data are distributed.*
Grades 3 - 5 Expectations: In grades 3 - 5 all students should: Develop and evaluate inferences and predictions that are based on data.
• *Propose and justify conclusions and predictions that are based on data and design studies to further investigate the conclusions or predictions.*

GRADES 6 - 8 NUMBERS AND OPERATIONS
Grades 6 - 8 Expectations: In grades 6 - 8 all students should: Understand numbers, ways of representing numbers, relationships among numbers, and number systems.
• *Work flexibly with fractions, decimals, and percents to solve problems.*
• *Develop meaning for percents greater than 100 and less than 1.*
• *Understand and use ratios and proportions to represent quantitative relationships.*
• *Develop meaning for integers and represent and compare quantities with them.*
Grades 6 - 8 Expectations: In grades 6 - 8 all students should: Understand meanings of operations and how they relate to one another.
• *Understand the meaning and effects of arithmetic operations with fractions, decimals, and integers.*
Grades 6 - 8 Expectations: In grades 6 - 8 all students should: Compute fluently and make reasonable estimates.
• *Select appropriate methods and tools for computing with fractions and decimals from among mental computation, estimation, calculators or computers, and paper and pencil, depending on the situation, and apply the selected methods.*
• *Develop, analyze, and explain methods for solving problems involving proportions, such as scaling and finding equivalent ratios.*
ALGEBRA
Instructional programs from pre-kindergarten through grade 12 should enable all students to:
• *Understand patterns, relations, and functions.*
• *Represent and analyze mathematical situations and structures using algebraic symbols.*
• *Use mathematical models to represent and understand quantitative relationships.*
• *Analyze change in various contexts.*
Grades 6 - 8 Expectations: In grades 6 - 8 all students should: Understand patterns, relations, and functions.
• *Represent, analyze, and generalize a variety of patterns with tables, graphs, words, and symbolic rules when possible.*
• *Relate and compare different forms of representation for a relationship.*
• *Identify functions as linear or nonlinear and contrast their properties from tables, graphs, or equations.*
Grades 6 - 8 Expectations: In grades 6 - 8 all students should: Represent and analyze mathematical situations and structures using algebraic symbols.
• *Develop an initial conceptual understanding of different uses of variable.*
• *Explore relationships between symbolic expressions and graphics of lines, paying particular attention to the meaning of intercept and slope.*
• *Use symbolic algebra to represent situations and to solve problems, especially those that involve linear relationships.*
• *Recognize and generate equivalent forms for simple algebraic expressions and solve linear equations.*

Grades 6 - 8 Expectations: In grades 6 - 8 all students should: Use mathematical models to represent and understand quantitative relationships.
• *Model and solve contextualized problems using various representations, such as graphs, tables, and equations.*
Grades 6 - 8 Expectations: In grades 6 - 8 all students should: Analyze change in various contexts.
• *Use graphs to analyze the nature of changes in quantities in linear relationships.*
MEASUREMENT STANDARD
Instructional programs from pre-kindergarten through grade 12 should enable all students to:
• *Understand measurable attributes of objects and the units, systems, and processes of measurement.*
• *Apply appropriate techniques, tools, and formulas to determine measurements.*
Grades 6 - 8 Expectations: In grades 6 - 8 all students should: Understand measurable attributes of objects and the units, systems, and processes of measurement.
• *Understand both metric and customary systems of measurement.*
• *Understand relationships among units and convert from one unit to another within the same system.*
Grades 6 - 8 Expectations: In grades 6 - 8 all students should: Apply appropriate techniques, tools, and formulas to determine measurements.
• *Select and apply techniques and tools to accurately find length, area, volume, and angle measures to appropriate levels of precision.*
• *Solve problems involving scale factors, using ratio and proportion.*
• *Solve simple problems involving rates and derived measurements for such attributes as velocity and density.*
DATA ANALYSIS AND PROBABILITY
Grades 6 - 8 Expectations: In grades 6 - 8 all students should: Instructional programs from pre-kindergarten through grade 12 should enable all students to:
• *Formulate questions that can be addressed with data and collect, organize, and display relevant data to answer them.*
• *Select and use appropriate statistical methods to analyze data.*
• *Develop and evaluate inferences and predictions that are based on data.*
• *Understand and apply basic concepts of probability.*
Grades 6 - 8 Expectations: In grades 6 - 8 all students should: Formulate questions that can be addressed with data and collect, organize, and display relevant data to answer them.
• *Formulate questions, design studies, and collect data about a characteristic shared by two populations or different characteristics within one population.*
• *Select, create, and use appropriate graphical representations of data, including histograms, box plots, and scatter plots.*
Grades 6 - 8 Expectations: In grades 6 - 8 all students should: Develop and evaluate inferences and predictions that are based on data
• *Use observations about differences between two or more samples to make conjectures about the populations from which the samples were taken.*
• *Make conjectures about possible relationships between two characteristics of a sample on the basis of scatter plots of the data and approximate lines of fit.*
• *Use conjectures to formulate new questions and plan new studies to answer them.*

Grades 6 - 8 Expectations: In grades 6 - 8 all students should: Understand and apply basic concepts of probability
• *Understand and use appropriate terminology to describe complementary and mutually exclusive events.*
• *Use proportionality and a basic understanding of probability to make and test conjectures about the results of experiments and simulations.*
• *Compute probabilities for simple compound events, using such methods as organized lists, tree diagrams, and area models.*
PROCESS STANDARDS
Problem Solving Instructional programs from pre-kindergarten through grade 12 should enable all students to:
• *Build new mathematical knowledge through problem solving.*
• *Solve problems that arise in mathematics and in other contexts.*
• *Apply and adapt a variety of appropriate strategies to solve problems.*
• *Monitor and reflect on the process of mathematical problem solving.*
Reasoning and Proof Instructional programs from pre-kindergarten through grade 12 should enable all students to:
• *Recognize reasoning and proof as fundamental aspects of mathematics.*
• *Select and use various types of reasoning and methods of proof.*
Communication Instructional programs from pre-kindergarten through grade 12 should enable all students to:
• *Organize and consolidate their mathematical thinking through communication.*
• *Communicate their mathematical thinking coherently and clearly to peers, teachers, and others.*
• *Analyze and evaluate the mathematical thinking and strategies of others.*
• *Use the language of mathematics to express mathematical ideas precisely.*
Connections Instructional programs from pre-kindergarten through grade 12 should enable all students to:
• *Recognize and use connections among mathematical ideas.*
• *Recognize and apply mathematics in contexts outside of mathematics.*
Representation Instructional programs from pre-kindergarten through grade 12 should enable all students to:
• *Create and use representations to organize, record, and communicate mathematical ideas.*
• *Select, apply, and translate among mathematical representations to solve problems.*
• *Use representations to model and interpret physical, social, and mathematical phenomena.*

Common Core Standards Alignments

Common Core State Standards for Mathematics in Grades 5 - 9
MATHEMATICAL PRACTICES - ASSOCIATED WITH MATHEMATICS AT ALL GRADE LEVELS
1. Make sense of problems and persevere in solving them
2. Reason abstractly and quantitatively.
3. Construct viable arguments and critique the reasoning of others.
4. Model with mathematics.
5. Use appropriate tools strategically.
6. Attend to precision.
7. Look for and make use of structure.
8. Look for and express regularity in repeated reasoning.
GRADE 5
Operations and Algebraic Thinking
• *Write and interpret numerical expressions.*
• *Analyze patterns and relationships.*
Number and Operations in Base Ten
• *Perform operations with multi-digit whole numbers and with decimals to hundredths.*
Measurement and Data
• *Convert like measurement units within a given measurement system.*
• *Represent and interpret data.*
Geometry
• *Graph points on the coordinate plane to solve real-world and mathematical problems.*
MATHEMATICS GRADE 6
In Grade 6, instructional time should focus on four critical areas:
• *Connecting ratio and rate to whole number multiplication and division and using concepts of ratio and rate to solve problems.*
• *Writing, interpreting, and using expressions and equations.*
• *Developing understanding of statistical thinking.*
GRADE 6
Ratios and Proportional Relationships
• *Understand ratio concepts and use ratio reasoning to solve problems.*
The Number System
• *Compute fluently with multi-digit numbers and find common factors and multiples.*
Expressions and Equations
• *Apply and extend previous understandings of arithmetic to algebraic expressions.*
• *Reason about and solve one-variable equations.*
• *Represent and analyze quantitative relationships between dependent and independent variables.*

Statistics and Probability
• *Develop understanding of statistical variability.*
MATHEMATICS GRADE 7
In Grade 7, instructional time should focus on four critical areas:
• *Developing understanding of and applying proportional relationships.*
• *Developing understanding of operations with rational numbers and working with expressions and linear equations.*
• *Drawing inferences about populations based on samples.*
GRADE 7
Ratios and Proportional Relationships
• *Analyze proportional relationships and use them to solve real-world and mathematical problems.*
The Number System
• *Apply and extend previous understandings of operations with fractions to add, subtract, multiply, and divide rational numbers.*
Expressions and Equations
• *Use properties of operations to generate equivalent expressions.*
• *Solve real-life and mathematical problems using numerical and algebraic expressions and equations.*
MATHEMATICS GRADE 8
In Grade 8, instructional time should focus on three critical areas:
• *Grasping the concept of a function and using functions to describe quantitative relationships.*
GRADE 8
Expressions and Equations
• *Analyze and solve linear equations.*
Functions
• *Define, evaluate, and compare functions.*
• *Use functions to model relationships between quantities.*
Statistics and Probability
• *Investigate patterns of association in bivariate data.*
Common Core State Standards for Mathematics in High School
NUMBER AND QUANTITY
The Real Number System
• *Use properties of rational and irrational numbers.*
Quantities
• *Reason quantitatively and use units solve problems.*
The Complex Number System
• *Perform arithmetic operations with complex numbers.*

ALGEBRA
Seeing Structure in Expressions
• *Write expressions in equivalent forms to solve problems*
Creating Equations
• *Create equations that describe numbers or relationships*
Reasoning with Equations and Inequalities
• *Understand solving equations as a process of reasoning and explain the reasoning*
• *Solve equations and inequalities in one variable*
• *Solve systems of equations*
• *Represent and solve equations graphically*
FUNCTIONS
Linear, Quadratic, and Exponential Models
• *Interpret expressions for functions in terms of the situation they model*
MODELING
Modeling links classroom mathematics and statistics to everyday life, work, and decision-making. Modeling is the process of choosing and using appropriate mathematics and statistics to analyze empirical situations, to understand the better, and to improve decisions. Quantities and their relationships in physical, economic, public policy, social, and everyday situations can be modeled using mathematical and statistical methods. When making mathematical models, technology is valuable for varying assumptions, exploring consequences, and comparing predictions with data. *A model can be very simple, such as writing total cost as a product unit price and number bought, or using a geometric shape to describe a physical object like a coin. Even such simple models involve making choices. It is up to us whether to model a coin as a three-dimensional cylinder, or whether a two-dimensional disk works well enough for our purposes. Other situations- modeling a delivery route, a production schedule, or a comparison of loan amortizations- need more elaborate models that use other tools from the mathematical sciences. Real-world situations are not organized and labeled for analysis; formulating tractable models, representing such models, and analyzing them is appropriately a creative process.*
STATISTICS AND PROBABILITY
Interpreting Categorical and Quantitative Data
• *Summarize, present, and interpret data on a single count or measurement variable*
• *Interpret linear models*
Making Inferences and Justifying Conclusions
• *Make inferences and justify conclusions from sample surveys, experiments and observational studies.*

Authors: National Governors Association Center for Best Practices, Council of Chief State School Officers; Title: Common Core State Standards (insert specific content area if you are using only one); Publisher: National Governors Association Center for Best Practices, Council of Chief State School Officers, Washington D.C.; Copyright Date: 2010